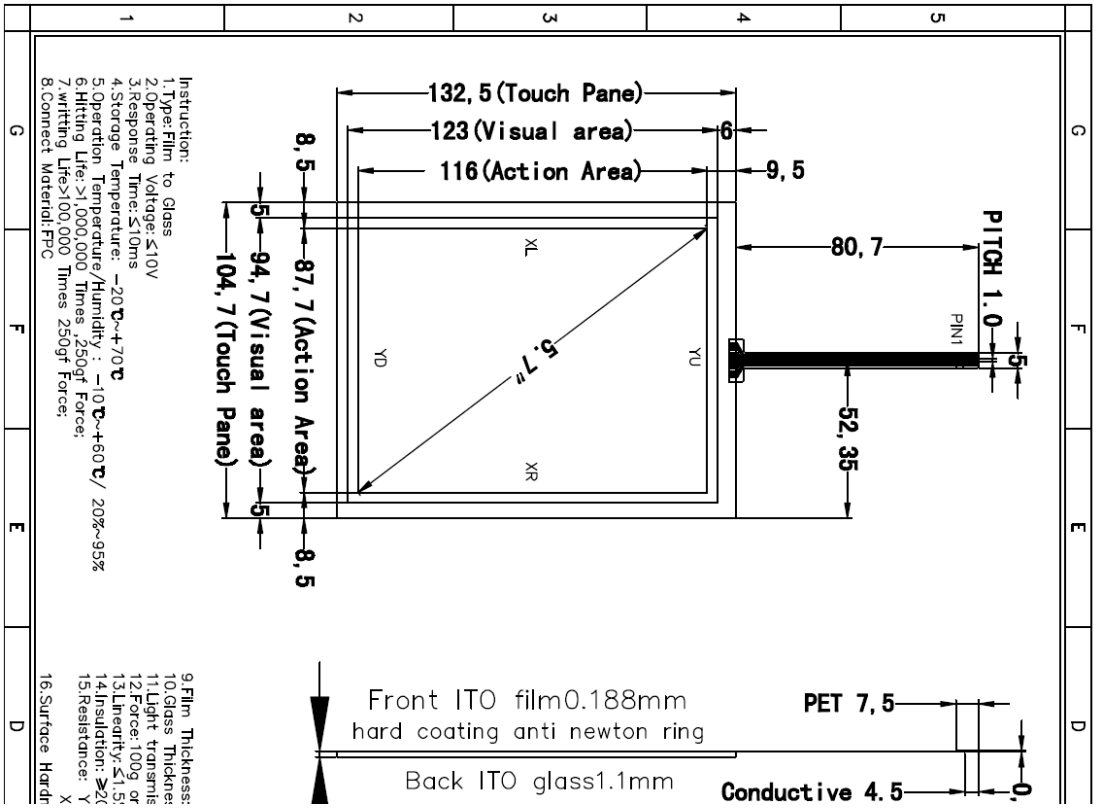Oasis Touch 4 wire Resistive 5.7” Touch Screen Panel